EFB 127 x 127 x 38 MM SERIES

* Bearing Type
  Ball Bearings
* Material
  Impeller & Frame : Plastic (UL 94V-0)
* Lead Wires :
  UL 1007 AWG #24 OR Equivalent
  Red Wire Positive (+)
  Black Wire Negative (-)
* Weight : 370g (13.05 oz)

■ DIMENSIONS DRAWING

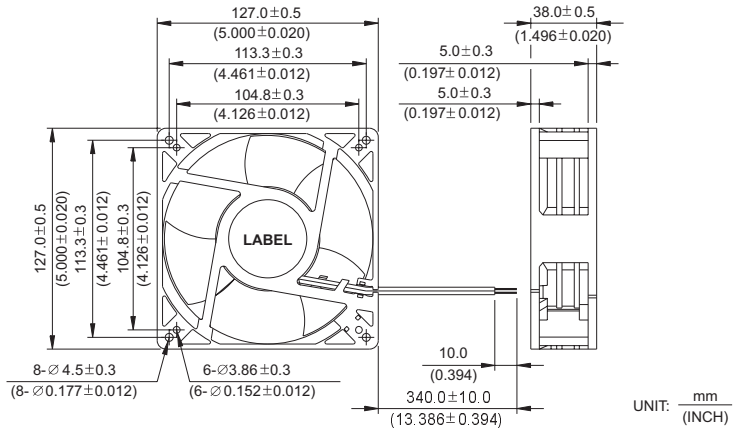

■ P & Q CURVE (AT RATED VOLTAGE)

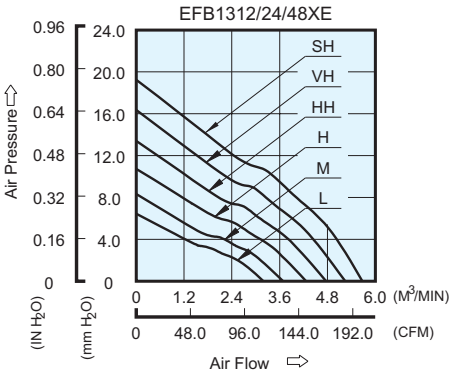

■ MOUNTING PANEL CUTOUT

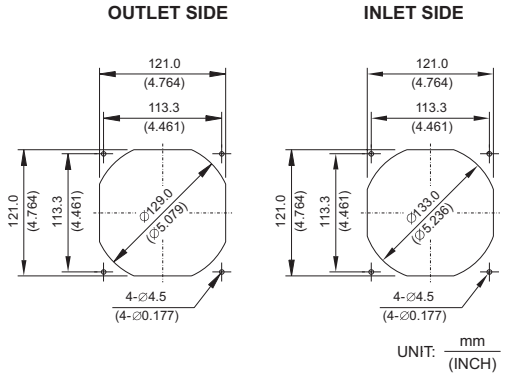

MODEL		Rated Voltage	Operating Voltage Range	Rated Current	Rated Input Power	Speed	Maximum Air Flow		Maximum Air Pressure		Noise
PART NO.	FUNCTION	VDC	VDC	Amp	Watt	R.P.M.	m^3 /min	CFM	mmH_2O	IN H_2O	dB-A
EFB1312LE	-R00 / -F00	12	7.0 to 13.6	0.40	4.80						
EFB1324LE	-R00 / -F00	24	14.0 to 27.6	0.22	5.28	2600	3.200	113.00	6.45	0.254	43.0
EFB1348LE	-R00 / -F00	48	28.0 to 56.0	0.12	5.76						
EFB1312ME	-R00 / -F00	12	7.0 to 13.6	0.58	6.96						
EFB1324ME	-R00 / -F00	24	14.0 to 27.6	0.31	7.44	3000	3.681	130.00	8.32	0.328	46.5
EFB1348ME	-R00 / -F00	48	28.0 to 56.0	0.16	7.68						
EFB1312HE	-R00 / -F00	12	7.0 to 13.6	0.82	9.84						
EFB1324HE	-R00 / -F00	24	14.0 to 27.6	0.41	9.84	3400	4.267	150.70	10.72	0.422	49.5
EFB1348HE	-R00 / -F00	48	28.0 to 56.0	0.21	10.08						
EFB1312HHE	-R00 / -F00	12	7.0 to 13.6	1.08	12.96						
EFB1324HHE	-R00 / -F00	24	14.0 to 27.6	0.54	12.96	3800	4.757	168.00	13.39	0.527	52.5
EFB1348HHE	-R00 / -F00	48	28.0 to 56.0	0.28	13.44						
EFB1312VHE	-R00 / -F00	12	7.0 to 13.6	1.40	16.80						
EFB1324VHE	-R00 / -F00	24	14.0 to 27.6	0.70	16.80	4200	5.239	185.00	16.35	0.644	55.5
EFB1348VHE	-R00 / -F00	48	28.0 to 53.0	0.36	17.28	4600	5.663	200.00	19.23	0.757	58.5
EFB1312SHE	-R00 / -F00	12	7.0 to 13.2	1.84	22.08						
EFB1324SHE	-R00 / -F00	24	14.0 to 26.4	0.92	22.08	4600	5.663	200.00	19.23	0.757	58.5

北京永宏诚大机电设备有限责任公司 电话:86-10-66131492 传真:86-10-66162242